Specifications

	SMZ445	SMZ460
Type	Twin zooming objective optical system	
Total magnification	8x ~ 35x (4x ~ 70x by replacing eyepiece and/or auxiliary objective lens)	7x ~ 30x (3.5x~60x by replacing eyepiece and/or auxiliary objective lens)
Eyepiece	SM 10xB eyepieces (F.N. 21), SM 15xB eyepieces (F.N.14), SM 20xB eyepieces (F.N. 12)	
Zoom range	0.8x ~ 3.5x (Zoom ratio: 4.4:1)	0.7x ~ 3x (Zoom ratio: 4.3:1)
Auxiliary objective lens	AL0.5x, 0.7x (optional)	
Working distance	100mm (standard configuration), 127.5mm (AL0.7x), 181mm (AL0.5x)	
Eyepiece inclination	45°	60°
Optical system	True erect image, 12° inner bevel, independent adjustment of right and left eyepieces, and 54 to 75mm interpupillary adjustment	
Weight (Zooming body)	Approx. 1.0kg	

Dimensions

SMZ445 Combination with the LED Stand

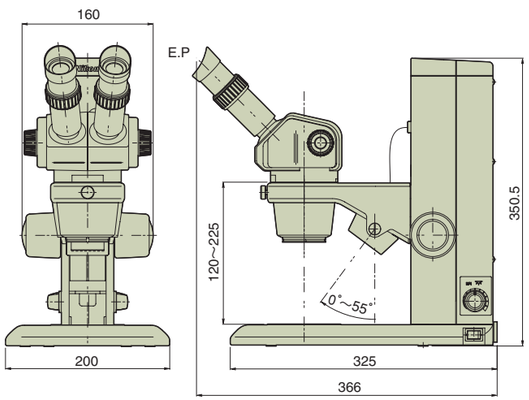

SMZ460 Combination with the LED Stand

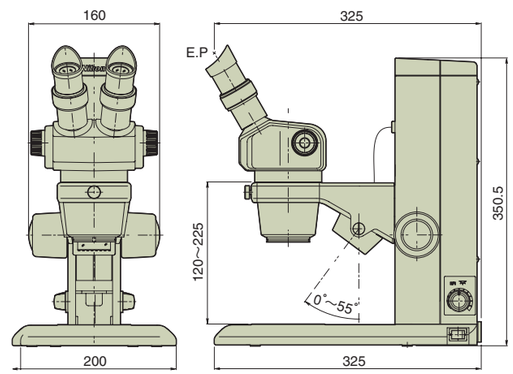

Specifications and equipment are subject to change without any notice or obligation on the part of the manufacturer. December 2007 ©2007 NIKON CORPORATION

⚠ WARNING	TO ENSURE CORRECT USAGE, READ THE CORRESPONDING MANUALS CAREFULLY BEFORE USING THE EQUIPMENT.

NIKON CORPORATION
6-3, Nishiohi 1-chome, Shinagawa-ku,
Tokyo 140-8601, Japan
phone: +81-3-3773-8973 fax: +81-3-3773-8986
http://www.nikon-instruments.jp/eng/

ISO 9001 Certified
NIKON CORPORATION
Instruments Company

ISO 14001 Certified
NIKON CORPORATION
Yokohama Plant

NIKON INSTRUMENTS INC.
1300 Walt Whitman Road, Melville, N.Y. 11747-3064, U.S.A.
phone: +1-631-547-8500; +1-800-52-NIKON (within the U.S.A.only)
fax: +1-631-547-0306
http://www.nikoninstruments.com/
NIKON INSTRUMENTS EUROPE B.V.
P.O. Box 222, 1170 AE Badhoevedorp, The Netherlands
phone: +31-20-44-96-222 fax: +31-20-44-96-298
http://www.nikoninstruments.eu/
NIKON INSTRUMENTS (SHANGHAI) CO., LTD.
CHINA phone: +86-21-5836-0050 fax: +86-21-5836-0030
(Beijing branch) phone: +86-10-5869-2255 fax: +86-10-5869-2277
(Guangzhou branch) phone: +86-20-3882-0552 fax: +86-20-3882-0580

NIKON SINGAPORE PTE LTD
SINGAPORE phone: +65-6559-3618 fax: +65-6559-3668
NIKON MALAYSIA SDN. BHD.
MALAYSIA phone: +60-3-78763887 fax: +60-3-78763387
NIKON INSTRUMENTS KOREA CO., LTD.
KOREA phone: +82-2-2186-8410 fax: +82-2-555-4415
NIKON CANADA INC.
CANADA phone: +1-905-625-9910 fax: +1-905-625-0103
NIKON FRANCE S.A.S.
FRANCE phone: +33-1-45-16-45-16 fax: +33-1-45-16-00-33
NIKON GMBH
GERMANY phone: +49-211-9414-0 fax: +49-211-9414-322
NIKON INSTRUMENTS S.p.A.
ITALY phone: +39-55-3009601 fax: +39-55-300993
NIKON AG
SWITZERLAND phone: +41-43-277-2860 fax: +41-43-277-2861

NIKON UK LTD.
UNITED KINGDOM phone: +44-20-8541-4440 fax: +44-20-8541-4584
NIKON GMBH AUSTRIA
AUSTRIA phone: +43-1-972-6111-00 fax: +43-1-972-6111-40
NIKON BELUX
BELGIUM phone: +32-2-705-56-65 fax: +32-2-726-66-45

Printed in Japan (0712-05) Am/M

Code No. 2CE-MQFH-1

Nikon

Stereoscopic Zoom Microscopes

SMZ445
SMZ460

Premium performance in a compact body

The SMZ445 and SMZ460 deliver the outstanding optical performance you expect from Nikon's cutting-edge series of stereoscopic zoom microscopes. Porro prisms enable a lightweight, compact design. Choose between the two models: the SMZ445 with 0.8x ~ 3.5x zoom magnification or the SMZ460 with 0.7x - 3.0x zoom magnification, inclination angles of 45˚ or 60˚ respectively. With the new diascopic/episcopic LED Stand, these microscopes let you observe a wide range of specimens, from Petri dishes to plants, insects, small animals and minerals.

Outstanding optical performance

High quality images with superior flatness are achieved by following the optical design and quality criteria of all Nikon's high-performance stereoscopic microscope series. The multicoatings on lens surfaces provide clear, bright and high contrast images.

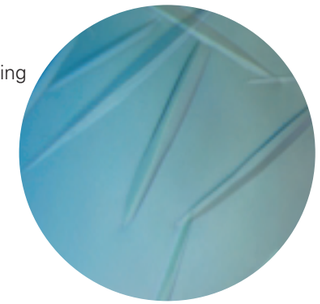

Long working distance

The long working distance of 100mm allows safe focusing even with specimens having markedly uneven surfaces. This is useful when using tweezers, dissection tools or a pipette during specimen manipulation.

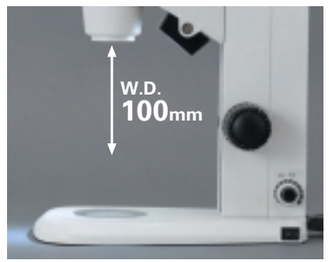

Mold-resistant finish

The inside of the zooming body is treated with a mold-resistant finish. This maintains the quality of the lenses even in hot, humid environments.

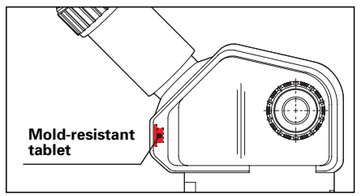

LED Stand with all-in-one design

The newly developed LED Stand features built-in diascopic and episcopic illumination. The light intensity of each illumination can be adjusted individually, and both can be used simultaneously. The light source uses very bright LEDs. Since they have a very long life, they avoid the cost and trouble of frequent replacement. And while the base is compact and thin, it is designed to be robust for all uses.

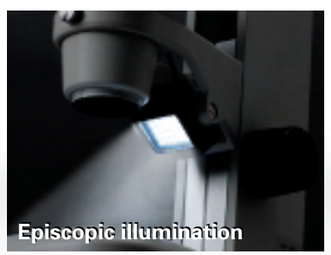

A single stand enables both diascopic and episcopic observation.

Diascopic illumination and episcopic illumination can be adjusted separately.

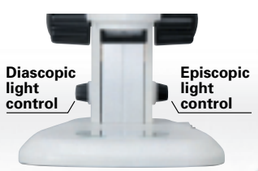

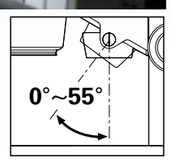

The angle of episcopic illumination can be adjusted through a range of 0˚~55˚.

Stands

In addition to the LED Stand with built-in diascopic and episcopic illumination, Nikon offers other choices like the Plain Stand, which comes in two base stand sizes, and the Diascopic Stand S, with a built-in 6V, 20W halogen lamp.

C-LEDS Hybrid LED Stand

C-PS/C-PSC Plain Stand

Eyepiece lenses

Dedicated eyepiece lenses with diopter adjustments for parfocality. Combining the SMZ445 with 20x eyepiece lenses enables observation at a maximum of 70x. Rubber eyecups are available for the 10x eyepiece lenses.

SM 10xB, SM 15xB, SM 20xB,
Eyecups available for SM 10xB eyepieces

Auxiliary objectives

Simply attaching an auxiliary objective lens achieves a wider field of view and longer working distance. Two type are available, 0.5x (WD 181mm) and 0.7x (WD 127.5mm).
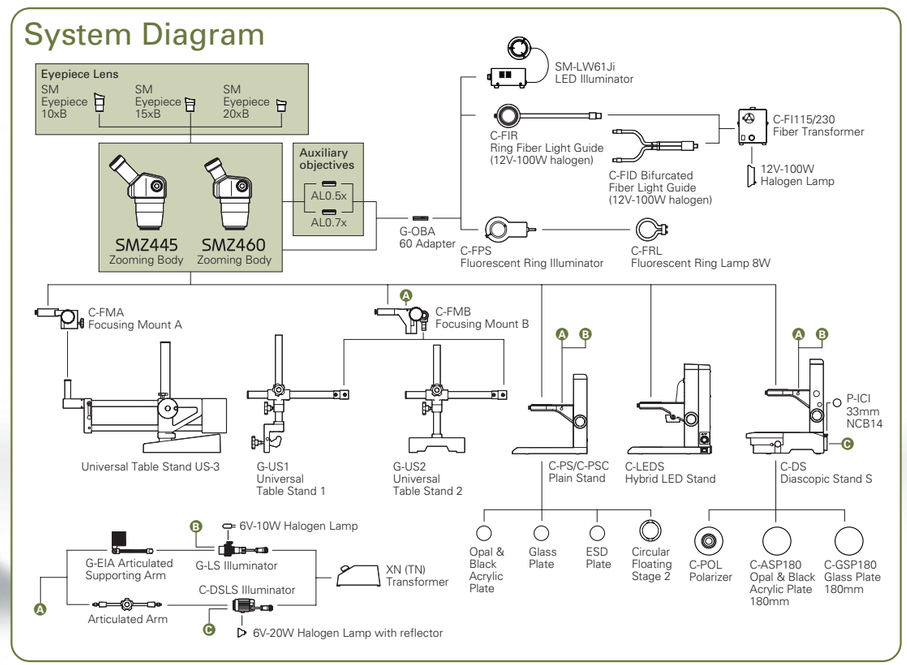
System Diagram